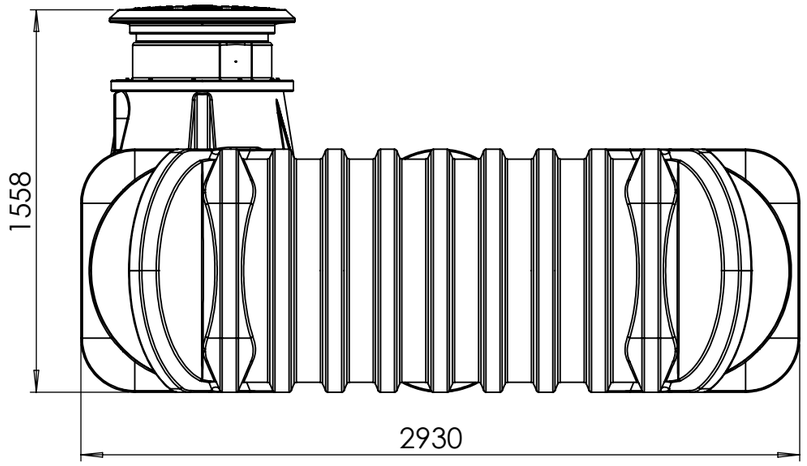

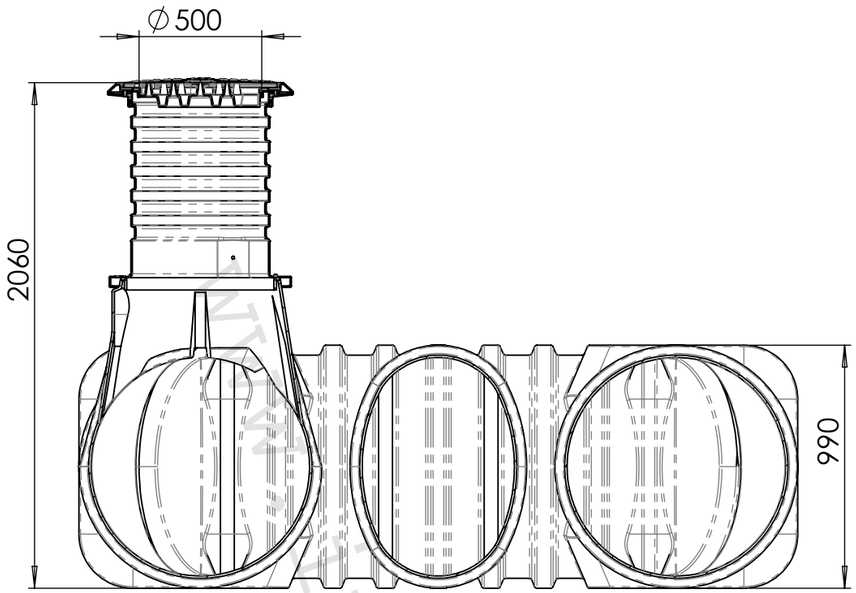

SECTION A-A

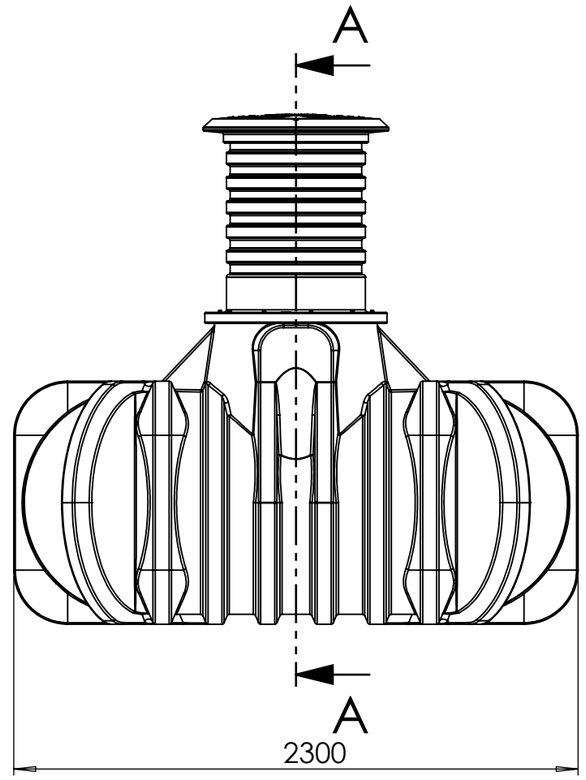

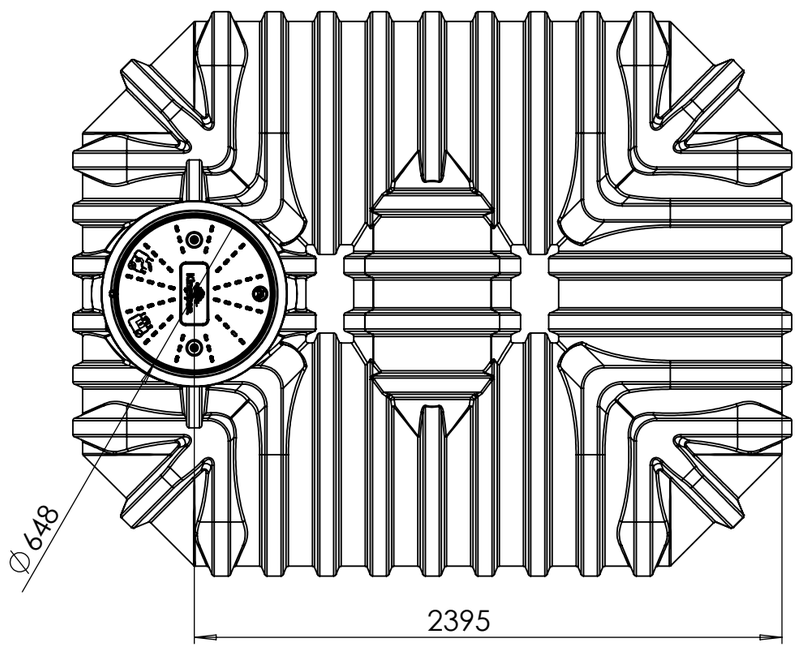

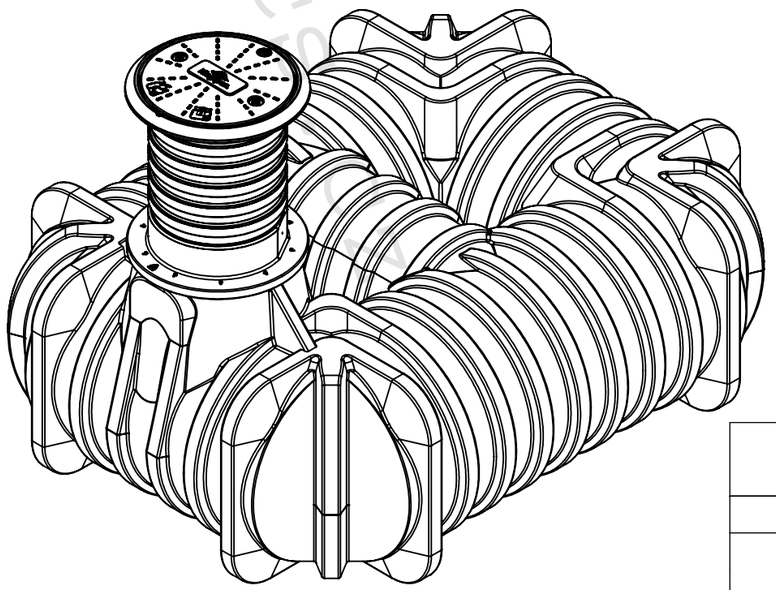

		FLAT 5 NO PIPES